Project Report: Design and Implementation of a Digital Combination Lock for Real-World Applications

Authors: First A. Shoaib Bin Kabir, Second B. Hasibul Islam Nabil, Third C. Maria Binte Yousuf, Fourth D. Burhan Uddin, Fifth E. Farhana Ahmed Shamantha, Sixth F. Samiul Haque

1. Project Overview

This project details the design and physical implementation of a digital combination lock utilizing fundamental digital electronics, specifically XOR and NOR logic gates. Digital combination locks have evolved from rudimentary electronic components in military settings to essential security infrastructure using modern integrated circuits. This project provides a hands-on approach to access control, utilizing DIP switches for code entry, logic gates for validation, and LED indicators for visual feedback.

2. Core System Components

The lock's hardware relies on the following key electronic components:

- **Logic Gates: * 4070 Quad XOR Gate:** Facilitates the bit-by-bit comparison between the user's entered code and the saved key code.
    - **4001 Quad NOR Gate:** Performs logical NOR operations to finalize the validation process.
- **Input Mechanisms: * 8-Position DIP Switches (x2):** Acts as the user interface for inputting the binary code.
    - **Normally Open Pushbutton:** Serves as the "Enter" button. Pressing it triggers the circuit to compare the entered code against the stored key.
- **Feedback & Output Mechanisms:**
    - **LEDs (x2):** Provides visual feedback. A green "Go" LED indicates a successful entry, while a red "No Go" LED signals a failed attempt.
    - **Door Unlocking Motor:** Actuates the physical locking mechanism when the correct code is verified.
- **Passive Components:**
    - **1N914 Switching Diodes (x4):** Used in a network to implement NOR logic functionality by logically ORing the XOR output signals.

- **Resistors:** 10 kΩ resistors are used for current limiting and voltage division to maintain proper signal levels, while 470 Ω resistors protect the LEDs from optimal brightness damage.
- **Power Supply:** Two 6V batteries (or equivalent 9V setups) power the autonomous circuit.

3. How the Circuit Works (Logic Explanation)

The digital lock operates on a straightforward but highly effective bit-comparison logic sequence:

1. **Code Input:** The user sets a binary sequence using the DIP switches.
2. **Bit-by-Bit Comparison (XOR Logic):** The core security relies on the 4070 Quad XOR gates. An XOR gate outputs a 0 (Low) only if both of its inputs are identical, and a 1 (High) if they are different. The circuit feeds the user's input bits and the pre-set key code bits into the XOR gates. If the user's code perfectly matches the key, all XOR gates will output a 0.
3. **Signal Aggregation (Diode NOR Logic):** The outputs from the XOR gates are fed into a diode network consisting of 1N914 switching diodes. This network acts as a logical OR gate.
4. **Final Validation:** * If **all** XOR outputs are 0 (meaning a perfect match), the NOR logic processing will yield a 1 (High). This activates the Green "Go" LED and triggers the motor to unlock the door.
    - If **even one** bit is incorrect, that specific XOR gate will output a 1. The diode network will catch this high signal, causing the final NOR logic to output a 0 (Low), which keeps the door locked and triggers the Red "No Go" LED.

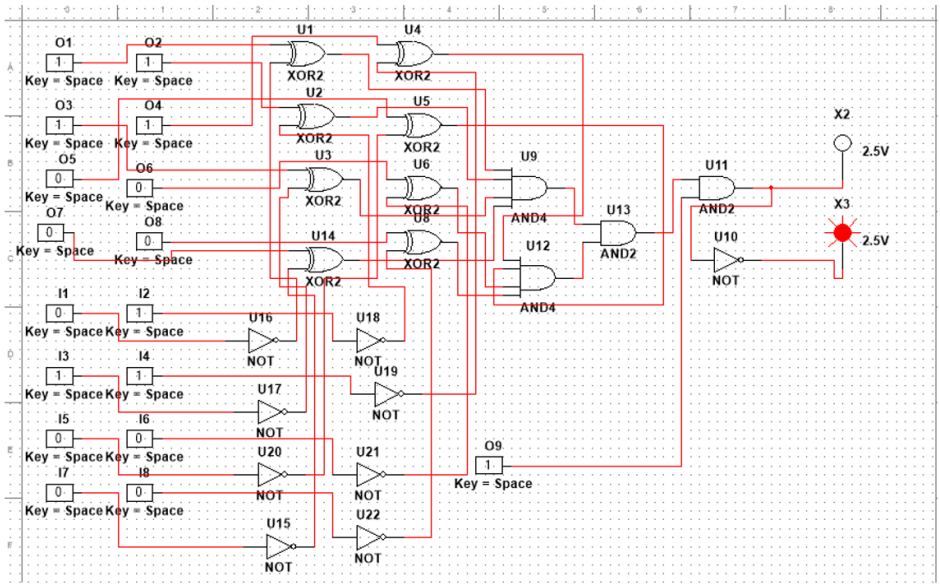

Figure 1 Here: Circuit of 8 bit combination lock

4. Implementation Steps (Methodology)

The construction of the lock followed a systematic methodology to ensure reliability:

- **Step 1: Conceptualization & Design:** Outlined the fundamental principles and researched the necessary logic components (XOR, NOR, diodes) needed for the desired functionality.
- **Step 2: Component Integration & Prototyping:** The chosen components were assembled into a cohesive layout using breadboards and jumper wires to ensure proper signal routing and power distribution.
- **Step 3: Modeling & Simulation:** Circuit simulation software and mathematical modeling were used to validate the design and predict system behavior before finalizing the physical build.
- **Step 4: Experimental Testing:** The prototype underwent rigorous testing scenarios. This included validating code accuracy, checking LED responsiveness, ensuring the motor activated properly, and testing environmental robustness (temperature and humidity).
- **Step 5: Refinement:** Iterative testing cycles were used to address design flaws and optimize performance parameters like response time and false alarm rates.

- **Step 6: Safety & Documentation:** Safety protocols (insulation, voltage limits) were strictly adhered to. Comprehensive documentation, including schematics and wiring diagrams, was produced for troubleshooting and future development.

5. Limitations and Future Directions

Current Limitations

While functional for educational and basic practical settings, the current iteration has several constraints:

- **Security Vulnerabilities:** The reliance on basic logic gates without advanced encryption leaves the circuit vulnerable to tampering or brute force attacks.
- **Rigid Interface:** The code length is fixed by the hardware (DIP switches), and manual entry via these switches is cumbersome compared to modern keypads.
- **Limited Feedback:** The simple Red/Green LED system does not provide specific troubleshooting data (e.g., indicating *which* bit is incorrect).
- **Environmental Sensitivity:** The raw circuit is susceptible to temperature, humidity, and physical vibrations.

Future Enhancements

To evolve this project into a robust, modern security solution, the following upgrades are recommended:

- **Authentication Upgrades:** Replace DIP switches with touchscreens or keypads, and integrate biometric or multi-factor authentication.
- **IoT Integration:** Connect the system to IoT platforms to allow for remote access control, real-time notifications, and digital access logs.
- **Hardware Optimization:** Utilize energy harvesting techniques to prolong battery life and enclose the circuit to protect against environmental factors.